XE40-100 SERIES (TTL), 5.0 VDC
SURFACE MOUNT "J" LEAD PACKAGE

Frequency Range	450 KHz to 100 MHz
Frequency Accuracy @ + 25 °C	± 15 PPM
Frequency Stability Vs. Temperature	See Options Below
Operating Temperature Range	See Options Below
Input Voltage	+ 5 VDC ± 10%

Input Current @ +5.0 VDC	
450 KHz to 5.0 MHz	10 mA Max.
5.1 MHz to 20.0 MHz	20 mA Max.
20.1 MHz to 40.0 MHz	30 mA Max.
40.1 MHz to 60.0 MHz	40 mA Max.
60.1 MHz to 100.0 MHz	60 mA Max.

Output	TTL (10 Loads)
Symmetry	60/40% @ 1.4 VDC Level
Rise & Fall Times (0.6 VDC to 2.2 VDC)	
< 40 MHz	6 nS Max.
≥ 40 MHz	3 nS Max.

Enable/Disable	See Options Below
Start-Up Time	5 mS Max.
Phase Jitter (10 KHz to 20 MHz Integrated)	0.15 pS rms Typical
Frquency Stability Vs. 10% change in Voltage	± 4 PPM Max.
Aging @ +25 °C	± 3 PPM Max. first year, ± 2 PPM Max./ Yr. thereafter
Package, Seal & Lead Finish	Conforms to the Requirements of MIL-PRF-55310

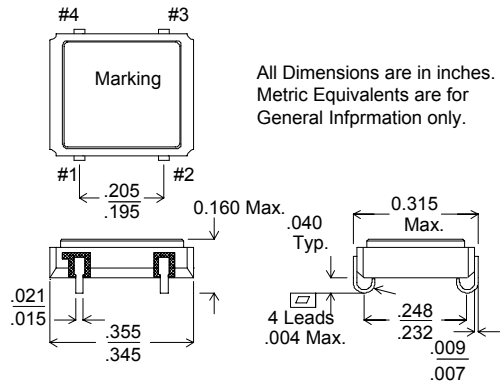

All Dimensions are in inches. Metric Equivalents are for General Infprmation only.

Pad #	Function
1	E/D (Optional)
2	GND/CASE
3	OUTPUT
4	V_{DD}

Inches		mm	
.345	.355	8.76	9.02
-	.315	-	8.00
.232	.248	5.89	6.30
.195	.205	4.95	5.21
-	.160	-	4.06
-	.040	-	1.02
.015	.021	.38	.53
.007	.009	.18	.23
-	.004	-	.10

Contact Xsis Engineering for any other special requirements.

ORDERING INFORMATION (Select from options below) :

XE40 – 1 [ ] [ ] [ ] – [ ] – FREQUENCY

Frequency Stability

1 = ± 0.1%
2 = ± 0.05%
3 = ± 100 PPM
4 = ± 50 PPM
5 = ± 20 PPM*
6 = ± 10 PPM*

*Options 5 and 6 are not available for all operating temperature range options

Operating Temperature Range

1 = 0 °C to + 70 °C
2 = - 40 °C to + 85 °C
3 = - 55 °C to +125 °C
4 = - 55 °C to +105 °C
5 = - 40 °C to + 95 °C
6 = - 20 °C to + 70 °C

G = Enable/Disable, Leave Blank Otherwise

M = Mil-Screening, Leave Blank Otherwise.

Enable/Disable Input: A "low" level at the input disables the output to a HI-Z state. Enable/disable input has internal pull-up.

EXAMPLE: XE40 –143G - M - 24.000 MHz = TTL Output, with Enable/ Disable Option, ± 50 PPM over -55 °C to +125 °C, Mil - Screened , 24.000 MHz

Xsis Electronics, Inc. 12620 W. 63rd St., Shawnee, KS 66216 Tel. 913-631-0448 Fax. 913-631-1170 email xsis@xsis.com